The SunLift Advantage

Control your lift and receive diagnostic reports through your smart phone.

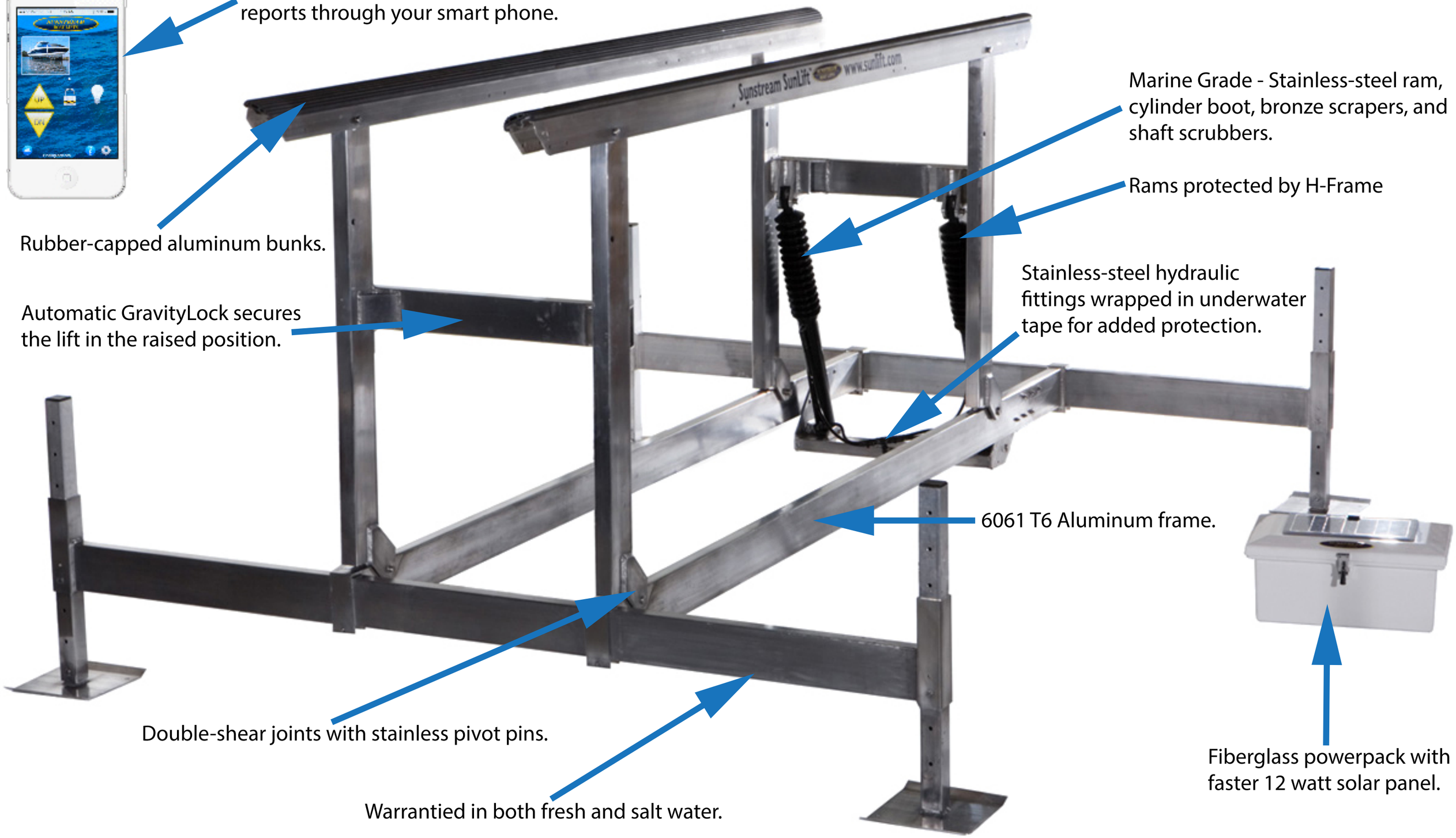

Rubber-capped aluminum bunks.

Automatic GravityLock secures the lift in the raised position.

Marine Grade - Stainless-steel ram, cylinder boot, bronze scrapers, and shaft scrubbers.

Rams protected by H-Frame

Stainless-steel hydraulic fittings wrapped in underwater tape for added protection.

6061 T6 Aluminum frame.

Double-shear joints with stainless pivot pins.

Warrantied in both fresh and salt water.

Fiberglass powerpack with faster 12 watt solar panel.